2D Drawing	IGES	STEP	3D PDF
Solder Profile	CofC RoHS Compliant	CofC REACH Compliant	UL Plastic File
Certificate of Origin	Check Stock	Request a Sample	Send Us An Email

Generated Part Number

GSLX-N-88-G/G-50

Part Number Builder

GSLX	–	N	88		G/G	50
Series		Options	No. of Positions & Contacts	Ground Pin Spacing	LED Color Option	Plating Option

Series
GSLX - Right Angle Modular Jack PCB Mount

Options
N - Non-Shielded with 3.38mm LED Pin to Peg
N2S - Shielded with 3.38mm LED Pin to Peg
N1S2 - Shielded with Top Grounding Tabs 2.79mm LED Pin to Peg
N2S2 - Shielded with Top Grounding Tabs 3.38mm LED Pin to Peg

Number of Positions / Contacts
88 - 8 Positions / 8 Contacts

Ground Pin Spacing
Blank - No Ground Pin
3.05 - 3.05mm Ground Pin Spacing

LED Color
G/G - Green/Green
G/Y - Green/Yellow
Y/G - Yellow/Green

Plating Option
Blank - Gold Flash (Standard)
50 - 50µ" Gold Plating

Contact Kycon for Other Options

MODULAR JACKS AND PLUGS:
GSLX Series Right Angle
Modular Jack with LED, Tab Down

Product Features
Easy Viewing LEDs for status Indicators
Snap in Retention Tabs
Available Fully Shielded for EMI/RFI Protection
CSA/NRTL Certified File No. LR78160

Performance Specifications
Materials and Finish
Housing Material
PBT Thermoplastic, UL 94V-0 Rated
Color: Black
Contact Material
Phosphor Bronze
Plating Options
Standard: Nickel Underplating, Gold Flash Plating on Contact Area Tin Plated on Solder Area
50 Option: Nickel Underplating, Contact Area Plated with 50µ" Gold to Comply with ANSI/TIA-1096-A, TIn Plated on Solder Area

Electrical Characteristics
Rating Current: 1.5A
Rating Voltage: 125V DC
Insulation Resistance
500 Megohms Min.
Contact Resistance
20 milliohms Max.
Dielectric Withstanding Voltage
1000V AC for 1 Minute

Mechanical Characteristics
Operating Temperature
-40°C to +85°C

GSLX Series
Dimensions in mm
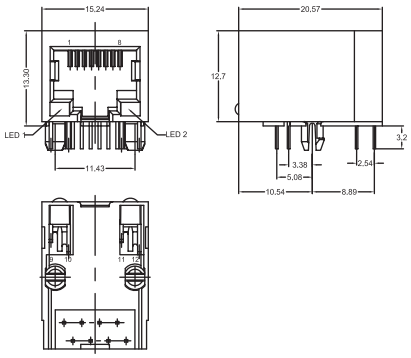
GSLX-N-88